DAYTONA
http://www.daytona-global.com

89655/20200220

INSTRUCTION

HIGH PERFORMANCE OIL PUMP

for Harley Davidson Milwaukee 8 engine
Air COOLED model
(except Twin-Cooled model)

Thank you for purchasing DAYTONA OIL PUMP KIT.

Product Features

- 126% feed and 131% scavenge volume compared to OEM (stock) M8-4th GEN oil pumps(1000rpm).
- 123% feed and 146% scavenge volume compared to OEM (stock) M8-4th GEN oil pumps(2500rpm).
- The scavenge side discharge was improved by modifying the suction ratio to help eliminate sumping from excess oil in the crankcase.
- Improved oil flow by inserting an oil passage correction spacer between the large capacity oil pump body and the cam support plate.

⚠

1. Read all instructions before use.
2. After installation, double check the instructions, install and check all the screws for proper torque.
3. If anything unusual may be found during the test ride safely pull over to check.

Install

1. Refer to HD service manual for oil pump installation.
2. See the parts catalog for each model and fitment.
3. Insert spacer(3) between pump body and the cam support plate.
4. Final tighten the four OIL PUMP mount screws to 90-120in/lbs (10.2-13.6Nm).
5. Don't forget to put the O-ring #11293.

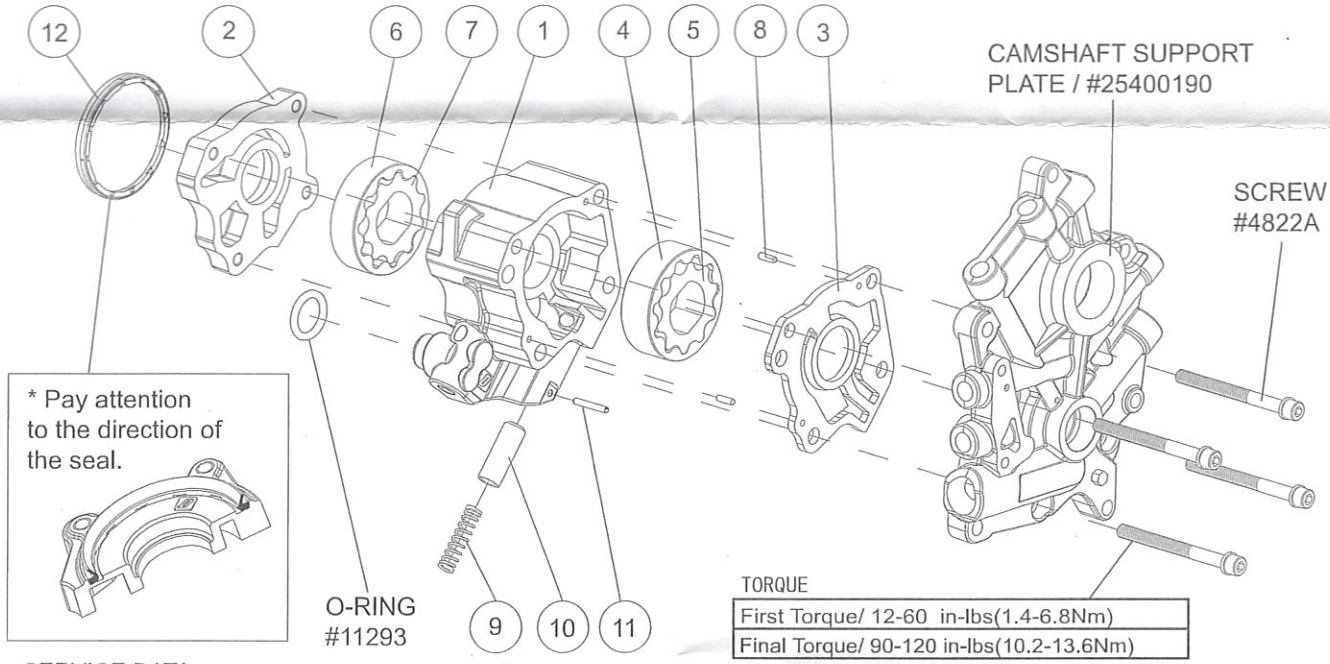

TORQUE
First Torque/ 12-60 in-lbs(1.4-6.8Nm)
Final Torque/ 90-120 in-lbs(10.2-13.6Nm)

SERVICE DATA

	POSITION	DESCRIPTION	STANDARD	SERVICE LIMIT
A	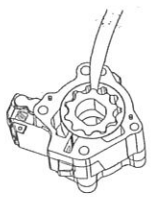	Gap between inner rotor and outer rotor	0.0027 inch	0.0059 inch
			0.07 mm	0.15 mm
B	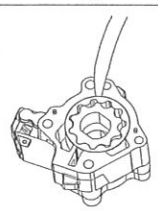	Clearance between outer rotor and oil pump housing	0.0055 inch	0.0082 inch
			0.14 mm	0.21 mm

PARTS LIST

	DESCRIPTION	QTY
1	BODY,OIL PUMP ASSY	1
2	COVER,OIL PUMP	1
3	SPACER,OIL PUMP	1
4	ROTOR SCAVENGE,OUTER	1
5	ROTOR SCAVENGE,INNER	1
6	ROTOR FEED,OUTER	1
7	ROTOR FEED,INNER	1
8	PIN,SPACER	2
9	SPRING,RELIEF VALVE	1
10	RELIEF VALVE	1
11	ROLL PIN	1
12	SEAL,COVER	1